# Thermal Mass Flow Meter Catalog

## Introduction

Thermal gas mass flow meter is designed on the basis of thermal dispersion, and adopts method of constant differential temperature to measuring gas flow. It has advantages of small size, easy installation, high reliability and high accuracy, etc

## Principle

- The meter contains two platinum resistance temperature sensors. The thermal principle operates by monitoring the cooling effect of a gas stream as it passes over a heated sensor.
- Gas flowing through the sensing section passes over two sensors one of which is used conventionally as a temperature sensor, whilst the other is used as a heater.
- The temperature sensor monitors the actual process values whilst the heater is maintained at a constant differential temperature above this by varying the power consumed by the sensor.
- The greater the gas velocity, the greater the cooling effect and power required to maintain the differential temperature.

## Application

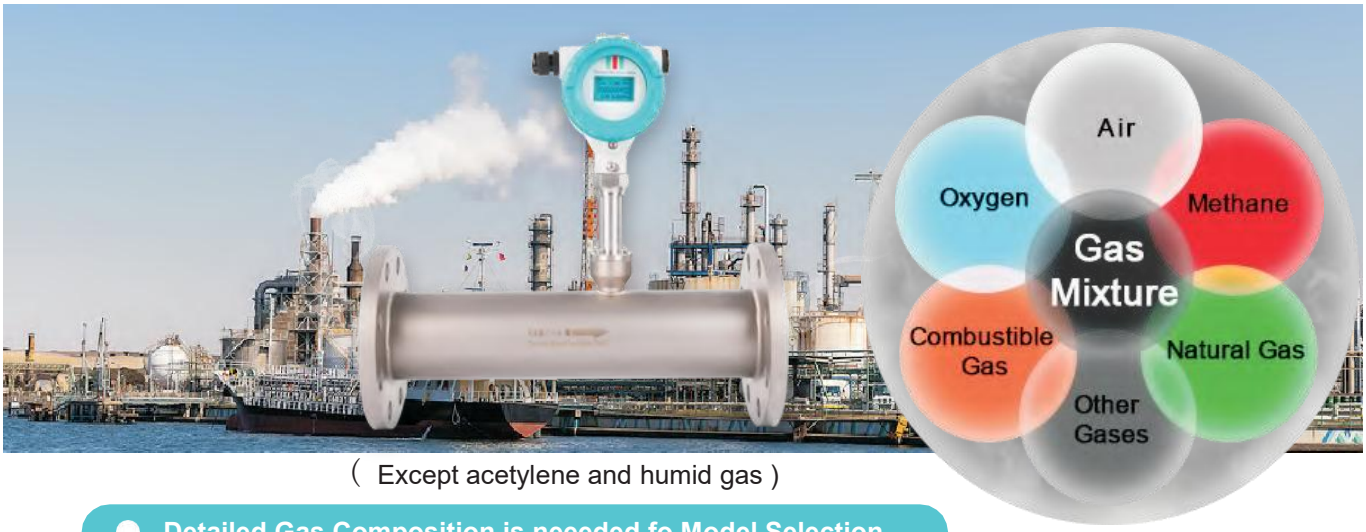


（ Except acetylene and humid gas ）

**Detailed Gas Composition is neeeded fo Model Selection**

## Features

1. Measuring the mass flow or volume flow of gas.
2. Wide range: 0.1Nm/s～100Nm/s for gas.
3. Can detec gas leak on pipe.
4. Good vibration resistance and long service life.
5. No moving parts or pressure sensor in transducer.
6. No vibration influence on the measurement.
7. Easy installation and maintenance.
8. Digital design, high accuracy and stability.
9. Configuring with RS485 or HART interface.

## Compact Structure

**Flange Connection**
DN10-DN4000

**Insertion Type**
DN32-DN4000

**Thread Connection**
DN10-DN200

**Tri-clamp Connection**
DN10-DN200

## Remote Structure

## Parameters

| | |
|---|---|
| Media | Various Gases (Except acetylene) |
| Pipe Size | Insertion type: DN32~DN4000mm<br>Flange type: DN10~DN300 (Can be customized)<br>Tri-clamp type: DN10~DN100<br>Thread type: DN10~DN100 |
| Velocity | 0.1-100Nm/s |
| Accuracy | In-line type:±1.0% Insertion type:±1.5% |
| Working Temperature | Sensor:-40~+220℃ Transmitter:-20~+80℃ |
| Working Pressure | Insertion type ≤1.6Mpa Flange type ≤4.0Mpa<br>Tri-clamps ≤1.6MPa Threads≤4.0Mpa<br>Special pressure please double check |
| Power Supply | DC24V and AC220V |
| Response Time | 1s |
| Output | 4-20mA, Pulse, RS485 (HART is optional) |
| Alarm Output | 1-2 way relay,10A/220V/AC or 5A/30V/DC |
| Construction | Compact, Remote |
| Pipe Material | Carbon Steel, Stainless Steel,Plastic etc. |
| Display | 4 lines LCD<br>Mass flowrate, Nominal flowrate, Flow totallizer, Velocity |
| Grade | IP65 |
| Flow Unit | $Nm^3/h$, $Nm^3/min$, Nl/h, Nl/min, t/h, t/min, kg/h and kg/min |
| Flow Rate Turndown | 100:1 |
| Cable length for remote type | 10m standard, 100m max optional |

## Model Selection

| Model | ZXMF | X | X | X | X | X | X | X |
|---|---|---|---|---|---|---|---|---|
| Caliber | DN10-DN4000 (3/8"-158") | | | | | | | |
| Structure | Compact | | C | | | | | |
| | Remote | | R | | | | | |
| Explosion Proof | Ex d IIC T6 Gb | | | EX | | | | |
| | Without | | | W | | | | |
| Material | SS304 | | | | 304 | | | |
| | SS316 | | | | 316 | | | |
| | others | | | | O | | | |
| Connection | Flange (DN10~DN300mm) | PN10/PN16/PN25/PN40(DIN) | | | | D** | | |
| | | A15:150#, A30:300# (ANSI) | | | | A** | | |
| | | 10K/20K/30K/40K (JIS) | | | | J** | | |
| | Tri-clamp (DN10~DN100mm) | | | | | C | | |
| | Thread (DN10~DN100mm) | | | | | T | | |
| | Insertion (DN32~DN4000mm) | | | | | I | | |
| Power Supply | AC85~250V | | | | | | AC | |
| | DC24~36V | | | | | | DC | |
| Signal Output | 4-20mA+Pulse+RS485 | | | | | | | RS |
| | 4-20mA+Pulse+HART | | | | | | | HT |

## Flow Range ($m^3/h$)

| Caliber ( mm ) | Air | Nitrogen ( $N_2$ ) | Oxygen ( $O_2$ ) | Hydrogen ( $H_2$ ) |
|---|---|---|---|---|
| 10 | 28 | 28 | 14 | 4 |
| 15 | 65 | 65 | 32 | 10 |
| 25 | 175 | 175 | 89 | 28 |
| 32 | 290 | 290 | 144 | 45 |
| 40 | 450 | 450 | 226 | 70 |
| 50 | 700 | 700 | 352 | 110 |
| 65 | 1200 | 1200 | 600 | 185 |
| 80 | 1800 | 1800 | 900 | 280 |
| 100 | 2800 | 2800 | 1420 | 470 |
| 125 | 4400 | 4400 | 2210 | 700 |
| 150 | 6300 | 6300 | 3200 | 940 |
| 200 | 10000 | 10000 | 5650 | 1880 |

| Caliber ( mm ) | Air | Nitrogen ( $N_2$ ) | Oxygen ( $O_2$ ) | Hydrogen ( $H_2$ ) |
|---|---|---|---|---|
| 250 | 17000 | 17000 | 8830 | 2820 |
| 300 | 25000 | 25000 | 12720 | 4060 |
| 350 | 45000 | 45000 | 22608 | 5600 |
| 400 | 70000 | 70000 | 35325 | 7200 |
| 450 | 100000 | 100000 | 50638 | 9200 |
| 500 | 135000 | 135000 | 69240 | 11280 |
| 600 | 180000 | 180000 | 90432 | 16300 |
| 700 | 220000 | 220000 | 114500 | 22100 |
| 800 | 280000 | 280000 | 141300 | 29000 |
| 900 | 400000 | 400000 | 203480 | 36500 |
| 1000 | 600000 | 600000 | 318000 | 45000 |
| 2000 | 700000 | 700000 | 565200 | 18500 |

# Flange Type Dimension

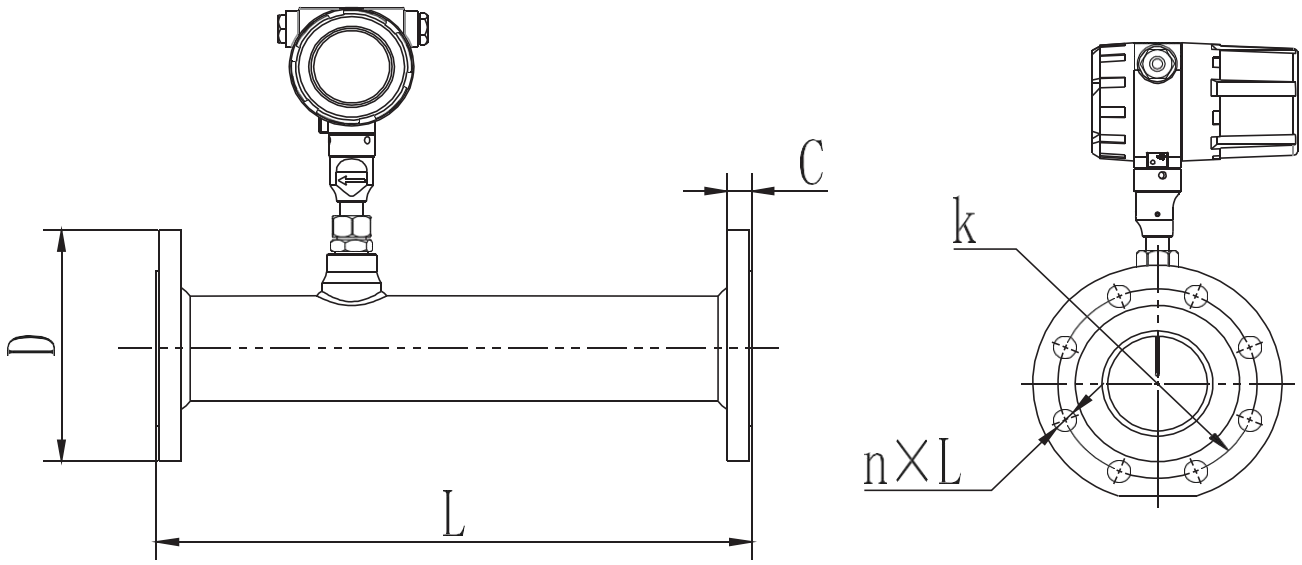


**Flange Type**

DIN PN16 Flange (Unit: mm)

| Nominal Diameter | Flange Outer Diameter | Center Hole | Screw Hole | Thread | Sealing Face | | Flange Thickness | Pipeline Length |
|---|---|---|---|---|---|---|---|---|
| DN | D | K | n×L | | d | f | C | L |
| 15 | 95 | 65 | 4×14 | M12 | 46 | 2 | 14 | 280 |
| 20 | 105 | 75 | 4×14 | M12 | 56 | 2 | 16 | 280 |
| 25 | 115 | 85 | 4×14 | M12 | 65 | 2 | 16 | 280 |
| 32 | 140 | 100 | 4×18 | M16 | 76 | 2 | 18 | 350 |
| 40 | 150 | 110 | 4×18 | M16 | 84 | 2 | 18 | 350 |
| 50 | 165 | 125 | 4×18 | M16 | 99 | 2 | 20 | 350 |
| 65 | 185 | 145 | 4×18 | M16 | 118 | 2 | 20 | 400 |
| 80 | 200 | 160 | 8×18 | M16 | 132 | 2 | 20 | 400 |
| 100 | 220 | 180 | 8×18 | M16 | 156 | 2 | 22 | 500 |

Above drawing is DIN PN16, other standards can be provided on request

## Dimension

Insertion TypeCable Length 10m standard, 100m max optional

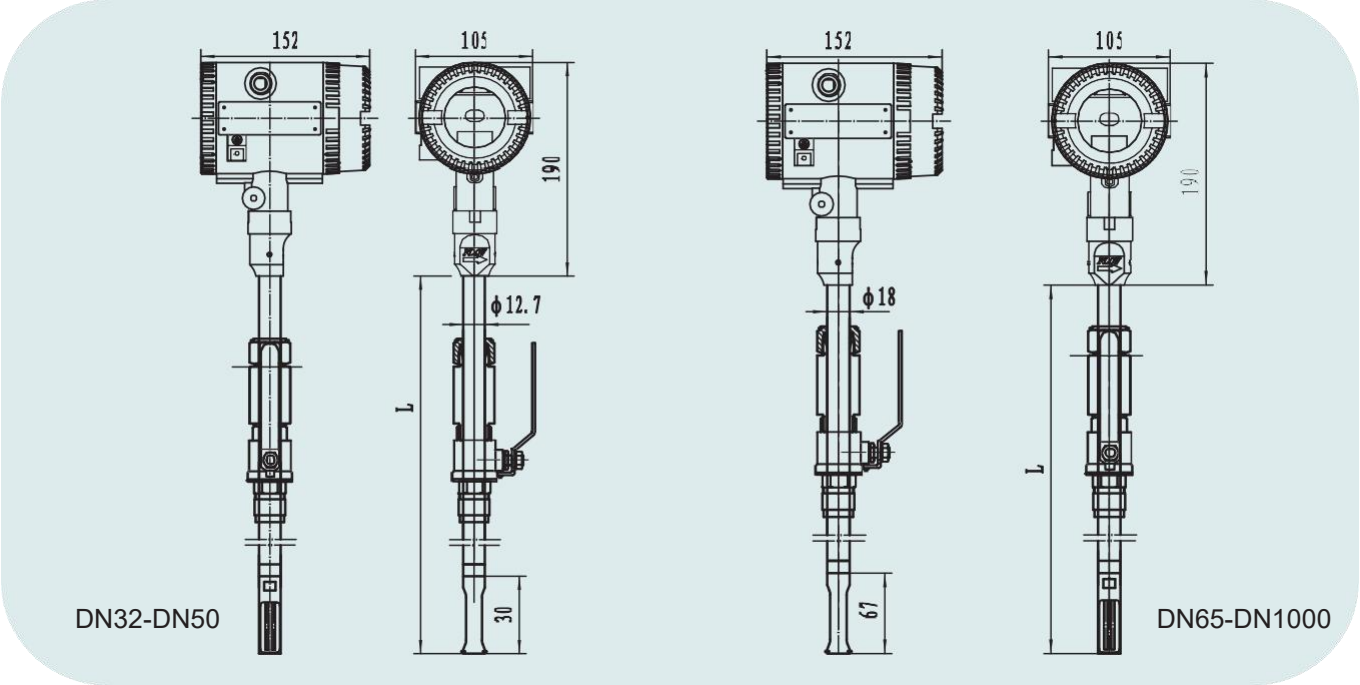


## Thermal Flow Meter Installation

1. When installing the thermal mass flowmeter, keep away from elbows, obstacles, reducers and valves to ensure a stable flow field. It is required to have a long upper straight pipe. The front straight pipe length is greater than 10D, and the rear straight pipe length is greater than 5D.

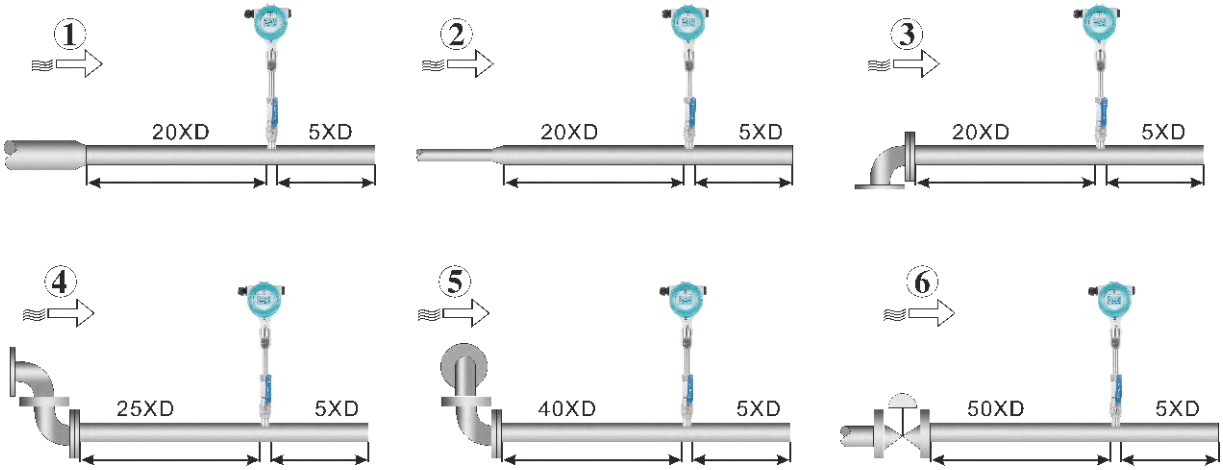


Installation upstream and downstream straight pipe

2. When the site cannot meet the requirements of the straight pipe section, the gas rectifier can be connected in series to greatly reduce the requirements for the straight pipe section.