26G RADAR LEVEL TRANSMITTER OPERATION MANUAL

Table of Contents

1. Principle of Measurement 2
2. Install.....4
3. Wiring.....6
4. Instrument Debugging.....7
5. Local Operation.....9
5.1. Keyboards description.....9
5.2. Instructions for measurement interface.....9
5.3. Instructions for echo interface.....9
5.4. Instructions for setup interface.....9
5.5. Basic menu introduction.....10
5.6. Display menu introduction.....10
5.7. Diagnostics menu introduction 11
5.8. Service menu introduction.....11
5.9. Info menu introduction.....12
6. Menu Tree.....13
6.1. First-level menu tree.....13
6.2. Secondary menu tree - Basic Settings.....13
6.3. Secondary menu tree - Display.....14
6.4. Secondary menu tree - Diagnostics.....14
6.5. Secondary menu tree -Services 14
6.6. Secondary menu tree -Info 15
7. Appendix 1 :Error code.....17
8. Appendix 2 :485 Debugging Instructions.....18

1. Measuring principle

Very short microwave pulses with very low emission energy are transmitted and received by antenna systems.Radar waves travel at the speed of light.The running time can be converted into a level signal via the electronic components.A special time extension method ensures stable and accurate measurements in a very short time. Even if there is false echo in complex working conditions, the echo of material position can be accurately analyzed with the latest microprocessing technology and debugging software.

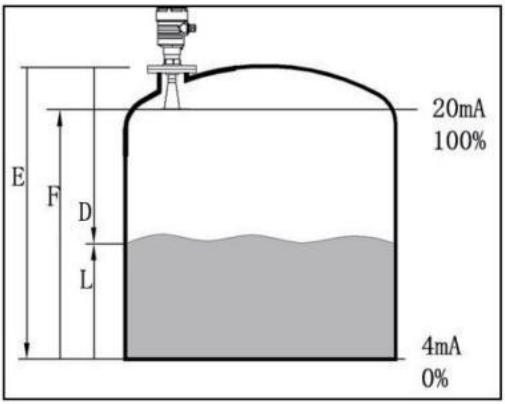

Input

The antenna receives the reflected microwave pulse and transmits it to the electronic circuit. The microprocessor processes the signal and identifies the echo generated by the micro-pulse on the material surface.The correct echo signal recognition is completed by intelligent software, and the accuracy can reach millimeter level.The distance D from the material surface is proportional to the time interval of the pulse:

$$D=C*T/2$$

Where C is the speed of light Since the distance E of the empty tank is known,

then the material/liquid level position L is:

$$L=E-D$$

Output

Set by input empty tank height E(= zero), full tank height F(= full range) and some application parameters, which will automatically make the meter adapt to the measuring environment.

Corresponds to a 4-20mA output.

Measuring conditions

Attention

· The measurement range is calculated from the point where the beam touches the bottom of tank, but in special cases, if the tank is concave or tapered, the measurement can't be carried out when the material level is lower than this point.

·If the permitivity of the medium is low, when it is at a low liquid level, the bottom in visibility At this time, in order to ensure the measurement accuracy, it is recommended to set the zero point at the low height of C.

· Theoretically, it is possible to measure the position to reach the antenna tip, but considering the influence of corrosion and adhesion, the final value of the measuring range should be at least 100mm away from the antenna tip.

·For over- flow protection, The safe distance can be defined and added onto the blind zone.

·The minimum measurement range is related to the antenna.

·Depending on the concentration, the foam can absorb and reflect microwaves, but it can be measured under certain conditions.

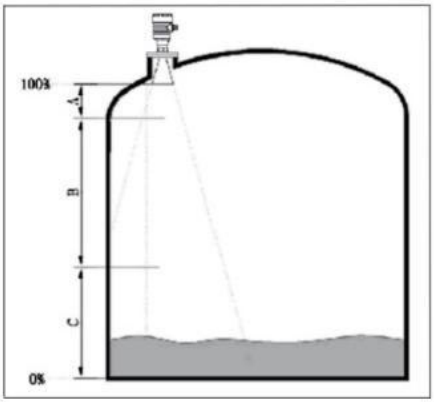

Action of measuring out of range

When the measuring range is exceeded, the meter output is 22mA current.

2. Install

- Recommended distance from the wall to the outer wall of the installed short pipe, as shown as (1).
- The minimum distance from the pipe wall to the tank is 1/6 of the diameter of the tank, Min 200mm.
- It cannot be installed above the feed Inlet, as shown as (4).
- It cannot be installed in the center, as shown as (3). If it is installed in the center, multiple false echoes will be generated, and interference echoes will lead to signal loss.
- If the distance between the meter and the tank wall cannot reach min distance, the media on the tank wall will cause false echoes. False echoes should be stored when debugging the sensor.

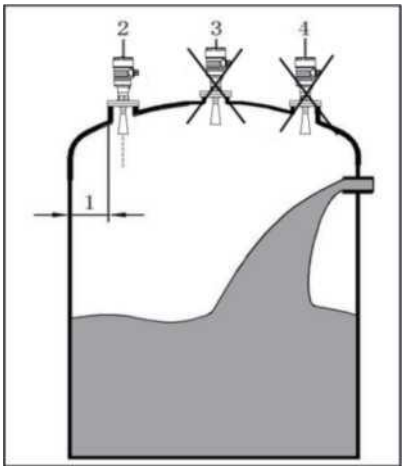

- Installation: keep 400mm distance at least between the meter and wall of container.

①: Reference surface

②: Central of container or axis of symmetry

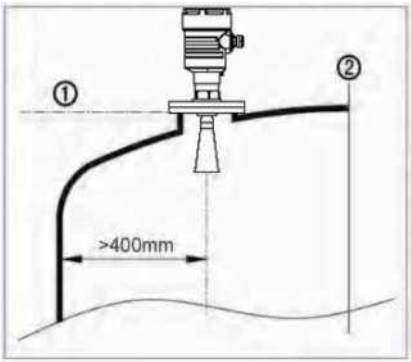

· For the conical container with flat top, the best install position is center of top. Because it can ensure the measurement signal reach to the bottom.

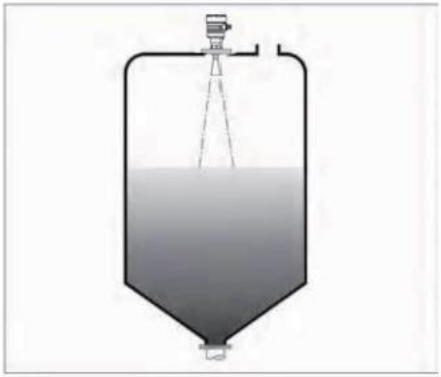

· Install with universal joint

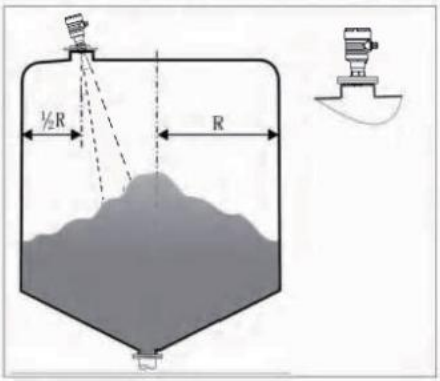

· Moisture protection:

For instruments installed outdoors or humid rooms or on cooling or heating tanks, tighten the cable seal cover for moisture protection and bend the cable down at the entrance. As the picture shows:

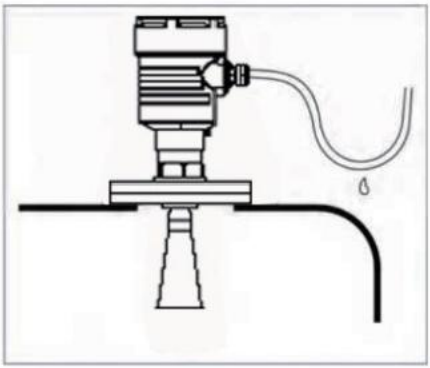

· Stirring

When there is stirring in the tank, the meter should be installed far away from the agitator as possible when necessary, and "false echo learning"* should be carried out under the stirring state to eliminate the influence of false echo generated by the stirring blade.

· Tank installation

1. In the signal beam, the following installations should be avoided: limit switches, temperature sensors, etc. As shown as (1).
2. Symmetrical devices, such as vacuum rings heating coils, baffles,etc. As shown as (2).
3. If there are(1) and (2) interfering material in the tank, the wave guide tube shall be used for measurement.
4. Best installation option.

   Antenna size: the larger antenna, the smaller the beam angle, the weaker the interference echo.
5. Antenna adjustment: adjust the antenna to the best measurement position.
6. Guide tube: guide tube is used to avoid interfering echoes.

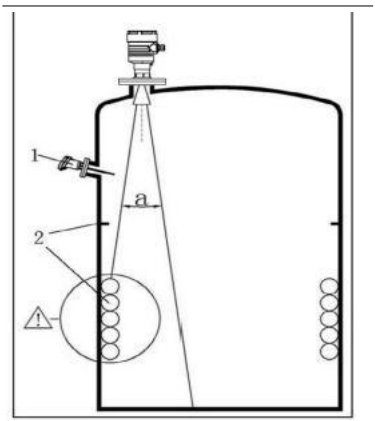

3. Wiring

Two-wire 、Single-chamber

(4-20) mA output.

HART two-wire system

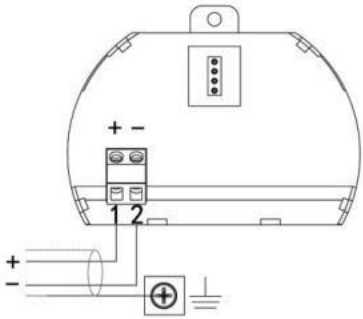

Two-wire 、Single-chamber

·RS485 Communication

MODBUS RTU Standard protocol

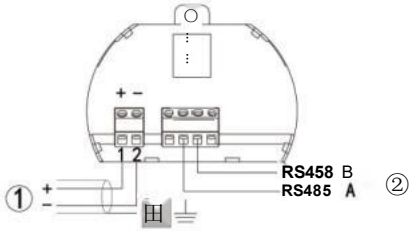

Intrinsically safe explosion-proof wiring

· (4-20)mA

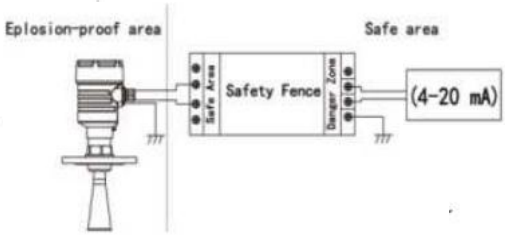

·RS485

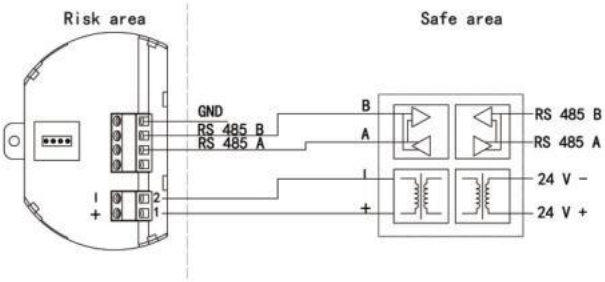

4.Instrument Debugging

Master computer debugging

Connect master computer by Hart device

1.RS232 connector/USB connector

2.DAR radar level sensor

3.Hart adaptor

4.2500 resistor

5.converter

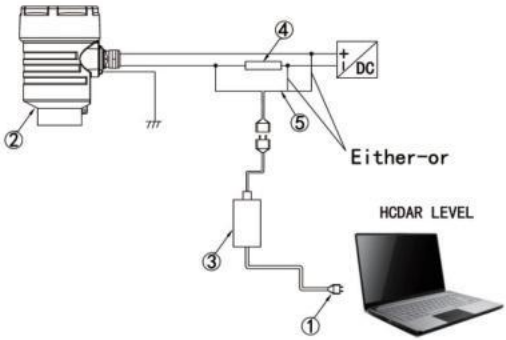

Programming through HART

handheld programmer

1.HART handheld programmer

2.DAR radar level sensor

3.2509 resistor

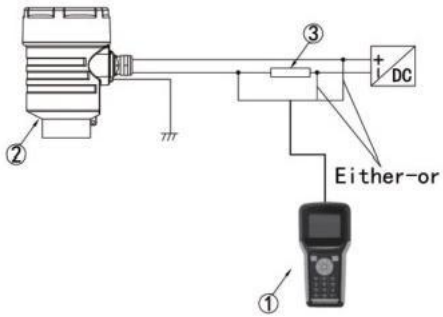

Two-wire load resistance diagram

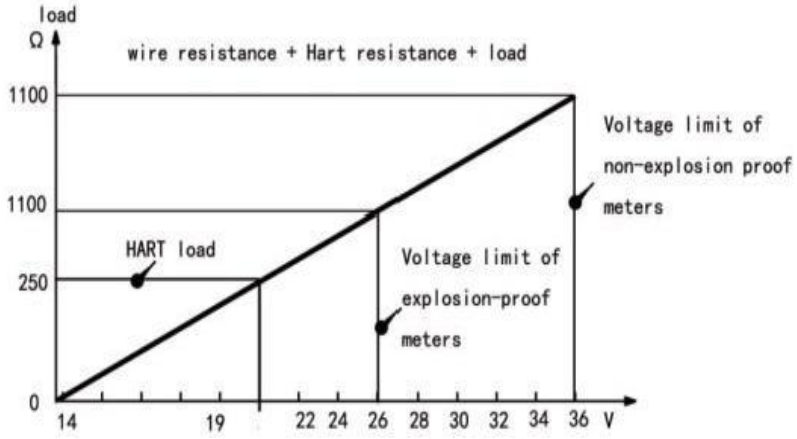

5. Local Operation

5.1 Keyboard description

System provides 5 modes of operation interfaces:

[**Run mode**]: Display system running status and current measurement result.

[**Echo mode**]: Display the real-time measured echo curve.

[**History Mode**]: Display historical measurement data recorded by the radar.

[**Setup Mode**]: Set various system parameters.

[**Input Mode**]: Input value of parameters, number or character.

The functions of the 4 keys are different under different modes.

5.2 Instructions for measurement interface

Keyboard	Function
ESC	-Switch to echo interface
＋	-NULL
▸	-NULL
OK	-Switch to Setup Interface

(1)Real-time data: Real-Time measurement result, which is converted from the distance between sensor and surface of medium.

(2) Unit: It refers to the system measurement unit.

(3) Version no. : the model number of product.

(4) Error code: specified Appendix:Error code.

5.3 Instructions for echo interface

Keyboard	Function
ESC	-Switch to **Measurement Interface**
＋	-NULL
▸	-NULL
OK	-NULL

5.4 Instructions for setup interface

■ Press [OK] to switch from the **Measurement Interface** to the **Setup Interface.**

Keyboard	Features
ESC	-Switch to **Measurement Interface/Exit**
＋	-Move up
▸	-Move down

OK	-Enter

5.5 Basic menu introduction

[Basic] Menu contains the necessary functions for quick start of the level meter, as shown in the following table. After selected the basic, press OK to enter into:

Default position	Parent menu item	Sub menu item
	Min. adjustment	
	Max. adjustment	
	Medium	**Liquid/ Solid/ Micro DK**
	Damping	**0-40s**
	Mapping curve	**Linear/ Cone**
	Scaled units	**Height/ m**
	Scaling	
	Range	
	Near blanking	
	Sensor tag	

(1) Min. Adjustment: Equal to cable length or pole length.
(2) Max. Adjustment: general is 0.
(3) Medium: choose liquid, solid or micro DK according the real situation.
(4) Mapping curve: general set Linear. The relationship between quantities in proportion and in a straight line. For example, error between the distance from product to the surface of the measured object. The error is the same at any position, rather than having a large error before and after, and a small error in the middle.
(5) Scaled units: generally set height and m.
(6) Scaling: Just use according to the factory settings.
(7) Range: According to your needs.
(8) Near blanking: It will ignore the echo wave which is within the Near blanking when signal algorithm processing, so could use this option to avoid the interference near the sensor.
(9) Sensor tag: it displays in measurement interface.

5.6 Display menu introduction

Default position	Parent menu item	Sub menu item
	Display value	**Shut off/ Distance/ Height/ Percent/ Map percent/ Scaled/ Current**

	LCD contrast	

(1) Display value: generally set height, you can also adjust according to your own needs.
(2) LCD contrast: you can adjust according to your needs.

5.7 Diagnostics menu introduction

Default position	Parent menu Item	Sub menu item
	Peak values	**Distance-min/ Distance-max**
	Meas. status	**Meas. reliability/ Sensor status**
	Choose curve	**Echo curve/ False echo curve/ Output trend**
	Echo curve	
	Simulation	**Percent/ Current/ Distance**

(1) Peak values: it includes distance-min and distance-max.
(2) Meas. Status: it includes measure reliability and sensor status.
(3) Choose curve: it includes echo curve, false echo curve and output trend.
(4) Echo curve: At measurement interface,then press ESC. You can also enter it.
(5) Simulation: generally choose current to simulate. Current simulation is used to check whether the 4-20mA output loop current is accurate and normal.

5.8 Service menu introduction

[Service] contains the options for inquiring the information about the device itself, as shown in the following table:

Default position	Parent menu Item	Sub menu item
	False echo memory	
	Current output	**Output mode/ Failure mode/ Min current**
	Reset	**Basic settings/ Factory settings/ Peak values meas**
	Units of measurement	**m(d)/ ft(d)**
	Language	**中文/ English/ Italian/ French**
	HART operation mode	**Standard address 0**
	Copy sensor data	
	PIN	
	Distance Adj.	

(1) False echo memory: False echo curve could study the false echo waves including the known obstacles in container. And forming a screening curve for the background noise (threshold curve TVT).
(2) Current output: it includes Output mode, Failure mode and Min current. Output mode includes 4-20mA and 20-4mA for your selection. Failure mode means that
(3) when the product is in fault, the output current is the one you choose, such as no change, 20.5mA, 22mA or 4mA. Min current includes 3.9mA and 4mA.
(4) Reset: It is used to restore the default factory settings of the level meter. The recovery time is about 15s to 20s. After that, LCD will jump to Measurement Interface automatically. It is recommended to used this option when the sensor can't works normally due to improper operations.
(5) Units of measurement: you can choose m or ft according to your needs.
(6) Language: it includes Chinese, English, Italian and French.
(7) HART operation mode: the standard address is 0.
(8) Copy sensor data: when use the debug app on PC,the set parameters can store in a file.
(9) PIN: you can set it according to your needs. If you set it, you will input the PIN before change the parameters.
(10) Distance Adj.:Used to correct the reference point of the sensor. If user wants to input negative value, just move the cursor to the high bit and press ＋ button to input the negative sign and then move to right and input the data. Finally, press OK to confirm.

5.9 Info menu introduction

Default position	**Parent menu Item**	**Sub menu item**
	Sensor Type	Such as RADAR SENSOR
	Serial number	
	Data of manufacture	Such as 2022-01-01
	Software version	

Note: After each parameter is edited, must press **[OK]** then press [ESC], otherwise editing is invalid.

6. Menu tree

6.1 First-level menu tree view

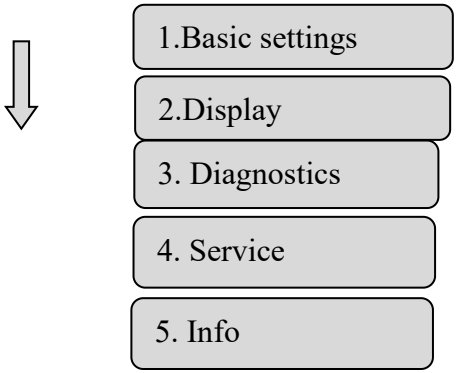

6.2 Secondary menu tree- Basic settings

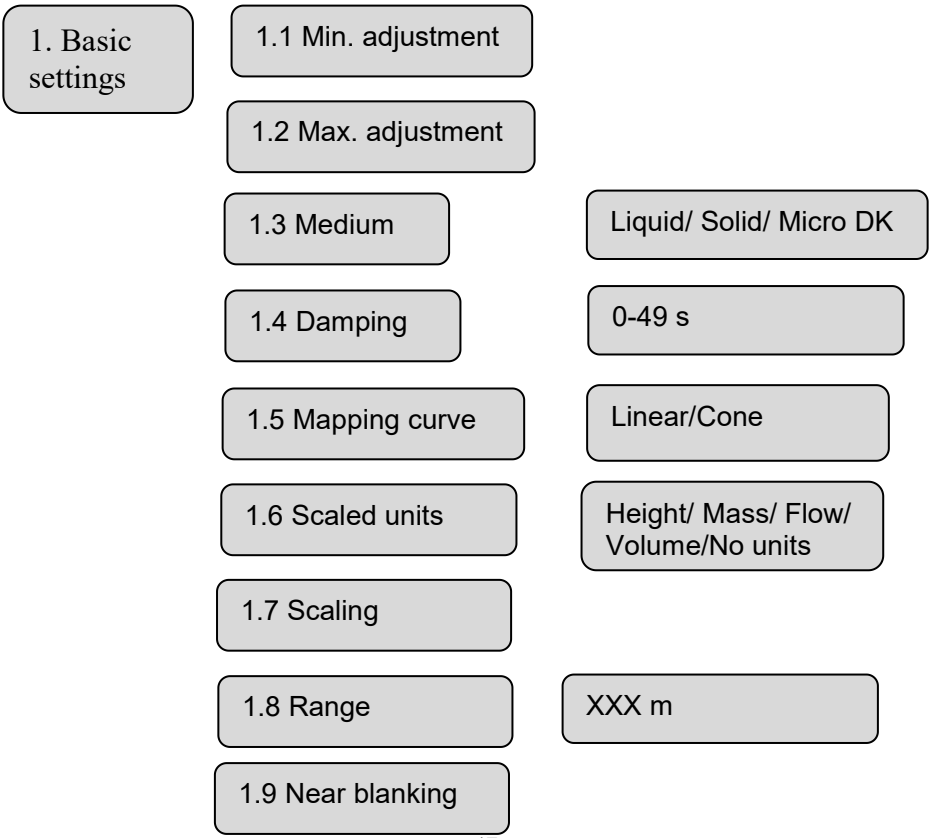

1.10 Sensor tag

6.3 Secondary menu tree- Display

- 2. Display
  - 2.1 Display value
    - Shut off/ Distance/ Height/ Percent/ Map percent/ Scaled/ Current
  - 2.2 LCD Contrast

6.4 Secondary menu tree- Diagnostics

- 3. Diagnostics
  - 3.1 Peak values
    - Distance-min/ Distance-max
  - 3.2 Meas. status
    - Meas. Reliability/ Sensor status
  - 3.3 Choose curve
    - Echo curve/ False echo curve/ Output trend
  - 3.4 Echo curve
  - 3.5 Simulation
    - Percent/ Current/ Distance

6.5 Secondary menu tree- Service

- 4. Service
  - 4.1 False echo memory
  - 4.2 Current output
    - Output mode/ Failure mode/ Min current

4.3 Reset

Basic settings/ Factory settings/ Peak values meas

4.4 Units of measurement

m(d)/ ft(d)

4.5 Language

中文/ English/ Italian/ French

4.6 HART operations mode

Standard Address 0

4.7 Copy sensor data

4.8 PIN

4.9 Distance Adj.

XXX m

6.6 Secondary menu tree- Info

5. Info

5.1 Sensor type

5.2 Serial number

5.3 Data of manufacture

5.4 Software version

7. Appendix 1：Error code

Error Code	Error Description	Solution
Err11	Abnormal power supply	Use a multimeter to check if the voltage and current at both ends of the product exceed the normal range of use
Err12	Abnormal communication	Check if the wiring between the load resistance (250 ohms) and the product and the upper computer is correct
Err13	Abnormal communication of RS485 MODBUS	Firstly, check whether the positive and negative terminals of the RS485 communication cables are wired according to the instructions, and confirm whether the RS485 to RS232 communication conversion module is working properly. After the hardware connection is correct, confirm whether the RS485MODBUS command sent is correctly sent according to the instruction table.
Err14	No echo found within range	Check the echo curve to confirm if the echo exists. Next, confirm if the product is currently in the blind zone. Also, check if the range matches the actual situation. Finally, confirm if the installation position meets the requirements.
Err15	Device memory storage data read and write errors	Return to factory for repair
Err16	The temperature inside the device exceeds the allowable range	The actual temperature of the electronic has exceeded the range of -40 to 85℃. Please ensure that the product operates within normal temperature range
Err17	Device EEPROM data read and write errors	Return to factory for repair
Err18	System component parameter mismatch	Return to factory for repair

8. Appendix 2: 485 Debugging Instructions

MODBUS communication protocol Instructions

Hardware and data format

Hardware interface:RS485

Baud rate:9600

Data format RTU 8N1

Calculation rules of CRC codes:

1. The preset 16-bit register is hexadecimal FFFF(those are all 1). This register is called as CRC register:
2. XOR has the first 8-bit data with the low of the 16-bit CRC register and save the result in the CRC register:
3. Check if the lowest bit is 0. If it is 0, shift the contents of the register to the right by one bit (towards the low), and fill the highest number with 0;
4. If it is 1, shift the contents of the register to the right by one bit forwards to the low, and fill the highest number with 0, the CRC register with the polynomial A001(101000000000000!):
5. Repeat step 3 until it is shifted 8 times to the right, so that the entire 8-bit data is processed.
6. Repeat step 2 through 4 to process the next 8-bit data.
7. The resulting CRC register is the CRC code. When the CRC result is placed in the information frame, the high and low level are swapped, and the low level is first.

Function code:

Register address 0x0000～0x0003:

the definition is as follows:

0x0000 measuring of empty value unit cm(read-only);

0x0001 measuring of empty value unit mm (read-only);

0x0002 measuring level value unit cm(read-only);

0x0003 measuring level value unit mm (read-only);

Station No	Function Code	Starting address	Read Bytes	Check code	significance
01	03	0000	0001	840A	Read the empty value unit:cm
01	03	0001	0001	D5CA	Read the peak value unit: mm
01	03	0002	0001	25CA	Read the level value unit: cm
01	03	0003	0001	740A	Read the level value umit:mm